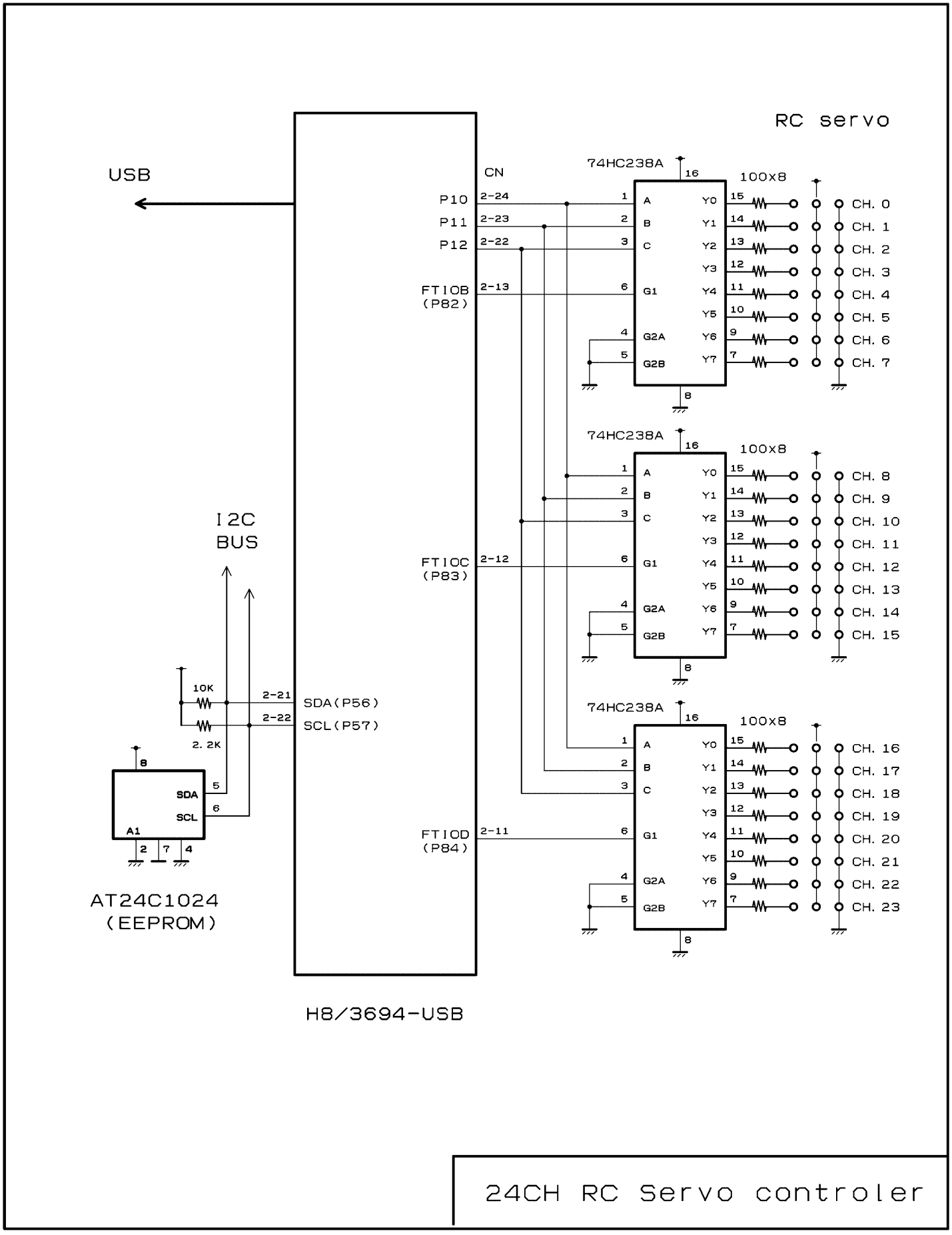

24CH RC Servo controler